Department of Energy
Carlsbad Field Office
P. O. Box 3090
Carlsbad, New Mexico 88221

April 25, 2023

Ms. Lee Ann B. Veal, Director
Radiation Protection Division
Office of Radiation and Indoor Air
U.S. Environmental Protection Agency
William Jefferson Clinton Building, West
1301 Constitution Ave NW, Mail Code 6608T
Washington, DC 20004

Subject: Addition of Four New Shielded Containers

Dear Ms. Veal:

The purpose of this letter is to notify you, per the requirements of 40 Code of Federal Regulations (CFR) § 194.4(b)(3)(i), Conditions of Compliance Certification, that the Department of Energy (DOE), Carlsbad Field Office (CBFO) is adding four shielded container (SC) variants as new payload containers for the emplacement of remote-handled (RH) transuranic (TRU) waste in the Waste Isolation Pilot Plant (WIPP) facility. Enclosure 1 contains the details of the four SC variants.

The new variants are similar to the SC-30G1 containers included in a 2007 Planned Change Request previously approved by your office. They similarly reduce the surface dose rate to less than 200 millirem per hour so that remote-handled (RH) TRU waste can be managed as contact-handled (CH) TRU waste. The four designs have been approved by the Nuclear Regulatory Commission. The SCs do not represent a significant change to the previous Environmental Protection Agency (EPA) approval in terms of TRU waste content, WIPP Waste Acceptance Criteria compliance, or long-term performance assessment.

If you have any questions, please contact Michael Gerle at (575) 988-5372.

Sincerely,

MARK BOLLINGER

Digitally signed by MARK BOLLINGER
Date: 2023.04.25 16:01:23 -06'00'

Mark Bollinger
Acting Manager
Carlsbad Field Office

Enclosure

cc: w/enclosure
T. Peake, EPA *ED
J. Santillan, EPA ED
H. Shah, EPA Region 6 ED
*ED denotes electronic distribution

CBFO:ERCD:MG:JV:23-0090

Enclosure 1

Shielded Container Assembly Variants Technical Details

Acronyms/Abbreviations/Units

DOE	U.S. Department of Energy
HalfPACT	Half Package Transporter (NRC-certified packaging, capable of transporting seven 55-gallon drums, one standard waste box, or up to three shielded container assemblies)
TRU	transuranic
WHB	Waste Handling Building
WWIS	WIPP Waste Information System

1.0 Introduction and Background

Approved by the Nuclear Regulatory Commission (NRC) (Reference 4) on 4/28/2022, the four SC variants (SC-30G2, SC-30G3, SC-55G1, and SC-55G2) are similar to the SC (SC-30G1) included in a 2007 Planned Change Request performance assessment previously approved by the Environmental Protection Agency (EPA) (Reference 1). As with the existing SC (SC-30G1), the lead and steel construction of the four new SC variants will reduce the surface dose rate at the outer surface to less than 200 millirem per hour (mrem/hr.) and will provide the shielding necessary to safely manage, store, and emplace RH mixed TRU waste as contact-handled (CH) mixed TRU waste.

NRC approval for the four new Shielded Container Assembly (SCA) variants has been obtained through an amendment to the HalfPACT Safety Analysis Report for Packaging. (Reference 5)

The differences between the SC-30G1 and the four new SC variants are primarily in size and weight due to shielding. However, the four new SC variants will continue to meet the applicable weight limits referenced in the WIPP Waste Acceptance Criteria (WAC).

Shielded containers were developed as a method for packaging and shipping RH TRU mixed waste while reducing the time and the number of personnel required to handle and process the waste. Currently, as described in Reference 3, the original SC30-G1 can only handle a limited inventory of RH TRU mixed waste at the generator sites because its size and construction, which limits the amount of shielding that can be placed inside.

More of the RH TRU mixed waste inventory can be shipped and disposed by utilizing the four new SC variants because of their larger internal volumes and/or additional shielding. The CBFO has suspended processing RH TRU mixed waste in RH TRU removable lid canisters and emplacing them in boreholes in the walls (ribs) of the disposal rooms. Consequently, these additional SC variants will provide alternatives for the generator sites to package RH TRU mixed waste for shipment for disposal at the WIPP facility. All RH TRU mixed waste packaged in four new SC variants will undergo the required characterization as RH TRU mixed waste as specified in the WIPP WAC. The volume of waste emplaced in the four new SC variants will be designated as RH TRU mixed waste and will be tracked/counted against applicable RH TRU mixed waste volume and curie limitations. The volume will be tracked and reported by CBFO pursuant to the Land Withdrawal Act (LWA) as the LWA TRU waste volume.

The management of the four new SC variants will not differ from the management practices of SC-30G1 currently approved for emplacement. Candidate RH TRU waste streams for shipment and disposal in SCs will be selected based on the requirement to keep the radiation surface dose rate at the external surface of the SC variants below 200 mrem/hr. A nuclear safety assessment pertaining to use of the four new SC variants at the WIPP facility has been performed. It was determined that the new designs for the four SC variants are covered under the existing Documented Safety Analysis (DSA) (i.e., the new designs are bounded by the existing DSA) and the four new SCs can safely be incorporated into CH TRU mixed waste disposal operations. The TRU waste content and packaging will continue to comply with the WIPP WAC and authorized generator/storage site procedures for measuring surface dose rates consistent with the EPA approval (Reference 1).

The new SC variants will be received at the WIPP facility configured in either two-packs or lateral single units within the HalfPACT Shipping Package. Models SC-30G2 & SC-55G1 are dual loaded and shipped vertically. Models SC-30G3 & SC-55G2 are single loaded and shipped horizontally. Emplacement of the four new SC variants will be similar to the SC-30G1 which is placed on the floor of a disposal room. The handling of the laterally configured single unit SCs (SC-30G3 & SC-55G2) will be processed in the same manner as other SCs (SC-30G1, SC-30G2 & SC-55G1) from receipt at the WIPP facility to the removal of

the axial and radial dunnage. Once the dunnage is removed at the TRUDOCK station, a crane and lifting attachment will be used to move the single lateral SC safely onto an emplacement rack and secured onto a facility pallet.

When ready for emplacement, the facility pallets can be transported safely into the underground. Emplacement racks loaded with lateral shielded containers can be unloaded from the facility pallet and emplaced directly on the disposal room floor in a safe and stable configuration.

In the November 2007 Planned Change Request (PCR) (Reference 2), a performance assessment (PA) was conducted to evaluate the effects on long-term repository performance of emplacing SCs in the disposal rooms. Bounding assumptions (e.g., total RH TRU mixed waste inventory estimates up to 7,080 m^3 emplaced in SCs) were used to evaluate the effects of emplacing SCs in the repository. Results showed that the WIPP facility will continue to comply with the containment requirements under the bounding assumptions. The addition of the four new SC variants does not represent a significant change to the 2007 Planned Change Request that the EPA approved in their August 2011 letter to the CBFO (Reference 1).

In summary, the use of these four new SC variants will facilitate the removal of RH TRU mixed waste from generator/storage sites in a manner that will have no adverse impact to the WIPP facility, to its operations, or to the long-term performance of the disposal system. The WIPP facility/operations will continue to meet the Environmental Radiation Protection Standards for Management and disposal of transuranic waste found in 40 CFR Part 191:

- Management and storage of the four new shielded container variants at the WIPP facility will be conducted in a manner as to provide reasonable expectation that the radiation protection standard at 40 CFR 191, Subpart A, will be met; and

- Disposal of the four new shielded container variants at the WIPP facility will be accomplished in a manner as to provide reasonable expectation that the environmental standards for disposal (containment and individual protection) at 40 CFR 191, Subpart B and C, will be met.

2.0 SC-30G2 Shielded Container

The SC-30G2 shielded container is authorized for transport within the HalfPACT (Figure 1-1). The HalfPACT will accommodate two SC-30G2s (Figure 1-2). The SC- 30G2 will be configured as a 2-pack on a circular pallet surrounded by radial and axial dunnage components and will be transported as a single 2-pack configuration within the HalfPACT packaging. The approximate dimensions of the SC-30G2 are given in Table 1-1.

Table 1-1. SC-30G2 Shielded Container Dimensions

Dimension	Approximate Measurement (inches)	
	Inside Dimension	Outside Dimension
Height	29½	36⅜
Diameter	20⅜	24½

The SC-30G2 body side wall is constructed of 1½-in. nominal lead with ⅝-in. nominal steel. The SC-30G2 lid is constructed of ¾-in. nominal lead with 3⅛-in. nominal steel. The SC-30G2

base is constructed of 1¼-in. nominal lead with 1¾-in. nominal steel.
The lid is bolted on with 12, ⅝-in. Grade 8 closure bolts. A gasket of silicone rubber is required for lid closure. The SC-30G2 and its 30-gallon steel drum contents are vented. The SC-30G2 vent port includes a lead shield plug. Table 1-2 presents the SC-30G2 materials of construction.

Table 1-2. SC-30G2 Shielded Container Materials of Construction

SC-30G2 Component	Material
Body flange	Carbon steel
Lid, body base, and body side wall	Lead and carbon steel
Filter shield plug	Lead
Gasket	Silicone rubber

Table 1-3 specifies the weights associated with the SC-30G2 that are applicable to shipment within the HalfPACT.

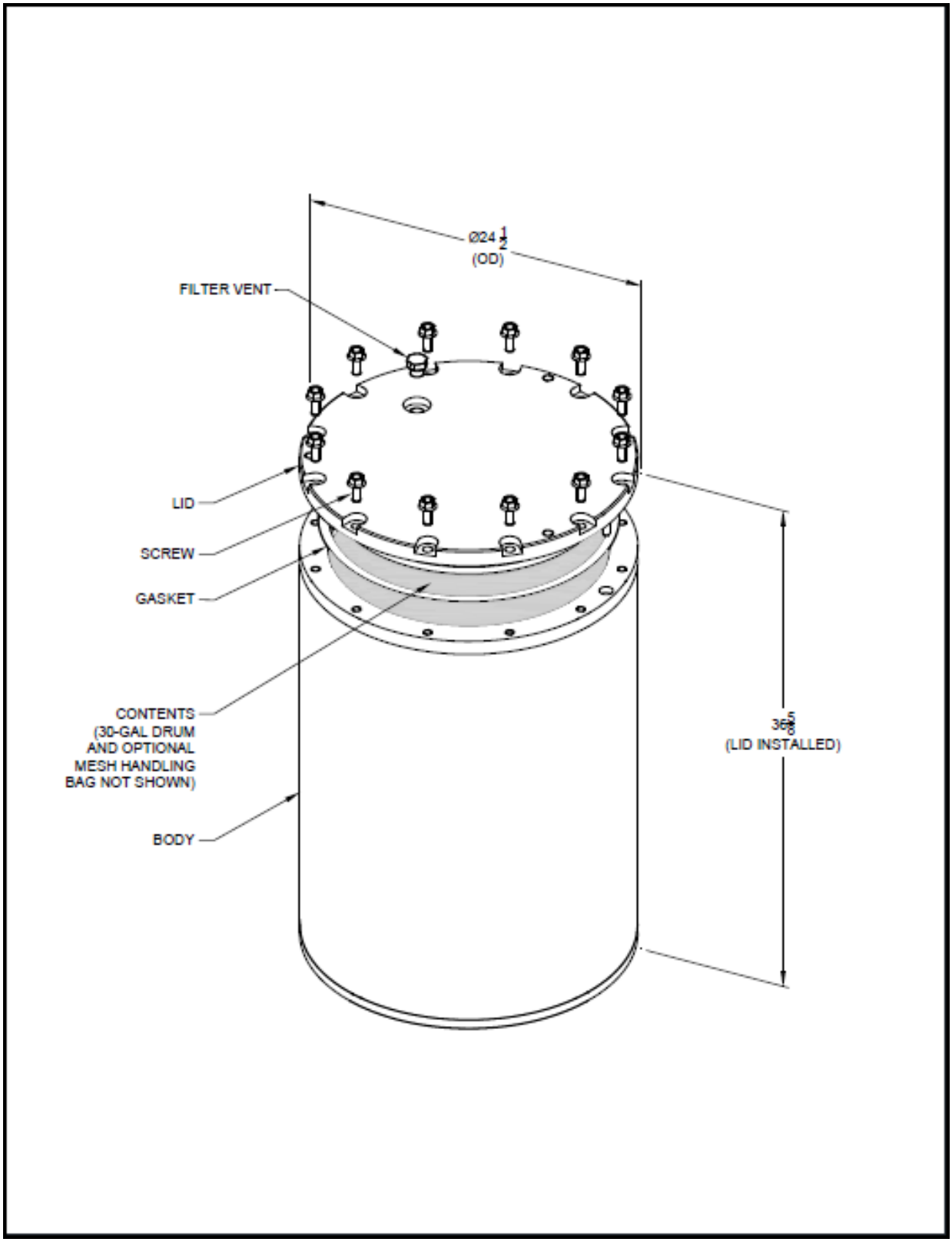

Figure 1-1. SC-30G2 Shielded Container (dimensions are in inches)

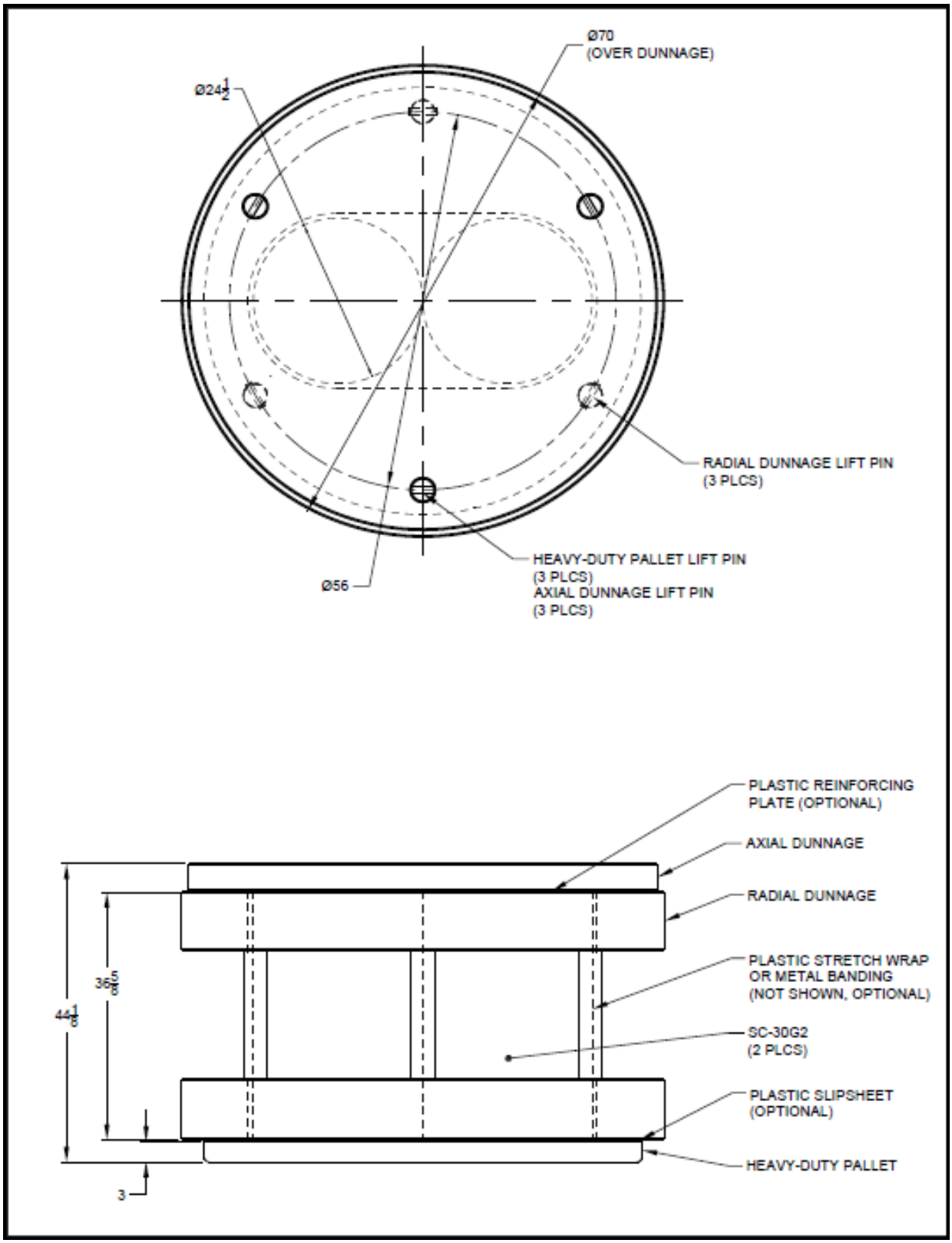

Figure 1-2. SC-30G2 Shielded Container Payload for HalfPACT (dimensions are in inches)

Table 1-3. SC-30G2 Shielded Container Weights

Component	Weight (pounds)	
	Approximate Empty	Maximum Gross
SC-30G2	2,610	3,160

Remote-handled transuranic (TRU) waste must be loaded into a vented 30-gallon steel drum with an inside lever lock, which is then loaded into the SC-30G2 with the aid of an optional mesh handling bag. Once loaded, the SC is shipped and managed as CH TRU waste. Empty SC-30G2s used as dunnage to complete a payload must also meet the specifications presented in this section with the exception that dunnage containers shall not include a 30-gallon drum and shall have an open vent port (i.e., not filtered or plugged).

Table 1-4 identifies material content forms authorized for transport within a SC-30G2.

Table 1-4. SC-30G2 Shielded Container: Material Content Forms Authorized for Transport

Form Number	Description
1	Direct loaded 30-gallon drum: Solids, any particle size (e.g., fine powder or inorganic particulates)
2	Direct load 30-gallon drum: Solids, large particle size (e.g., sand, concrete, or debris)
3	Direct load 30-gallon drum: Solids, large objects (e.g., metal cans containing waste)

3.0 SC-30G3 Shielded Container

The SC-30G3 shielded container is authorized for transport within the HalfPACT (Figure 2-1). The HalfPACT will accommodate one SC-30G3 (Figure 2-2). The SC- 30G3 will be configured as a lateral single-pack on a circular pallet surrounded and supported by radial and axial dunnage components and will be transported as one single-pack configuration within the HalfPACT packaging. The approximate dimensions of the SC-30G3 are given in Table 2-1.

Table 2-1**.** SC-30G3 Shielded Container Dimensions

Dimension	Approximate Measurement (inches)	
	Inside Dimension	Outside Dimension
Height	29¾	42¼
Diameter	20⅜	28

The SC-30G3 body side wall is constructed of 2¾-in. nominal lead with 1-in. nominal steel. The SC-30G3 lid is constructed of 2¼-in. nominal lead with 4½-in. nominal steel. The SC-30G3 base is constructed of 2½-in. nominal lead with 3¼-in. nominal steel.
The lid is bolted on with 12, ¾-in. Grade 8 closure bolts. A gasket of silicone rubber is required for lid closure. The SC-30G3 and its 30-gallon steel drum contents are vented. The SC-30G3 lid also incorporates a ¾-in. thick lead shield ring. Table 2-1 presents the SC-30G3 materials of construction.

Table 2-1. SC-30G3 Shielded Container Materials of Construction

SC-30G3 Component	Material
Body flange	Carbon steel
Lid, body base, and body side wall	Lead and carbon steel
Lid shield ring	Lead
Gasket	Silicone rubber

Table 2-2 specifies the weights associated with the SC-30G3 that are applicable to shipment within the HalfPACT.

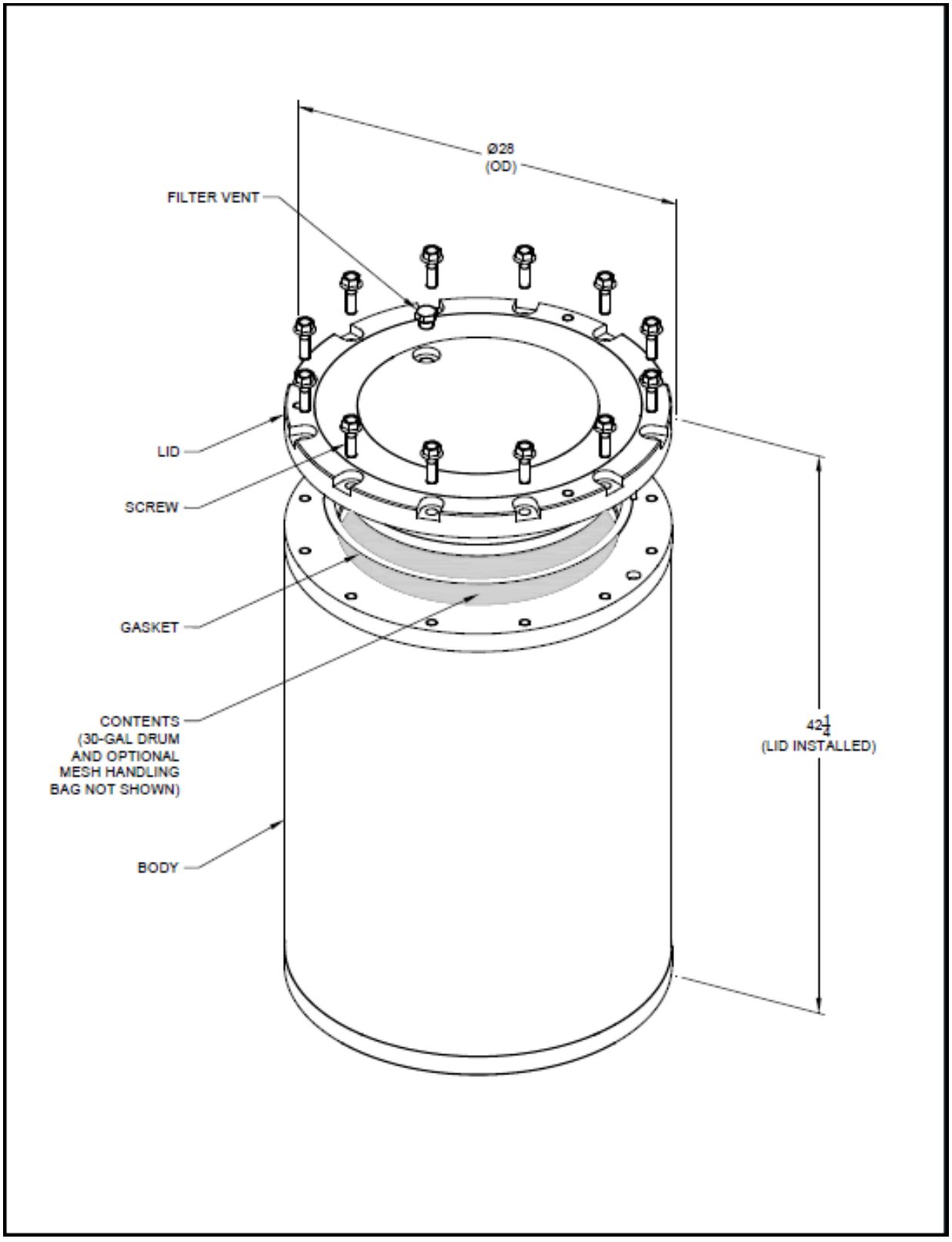

Figure 2-1. SC-30G3 Shielded Container (dimensions are in inches)

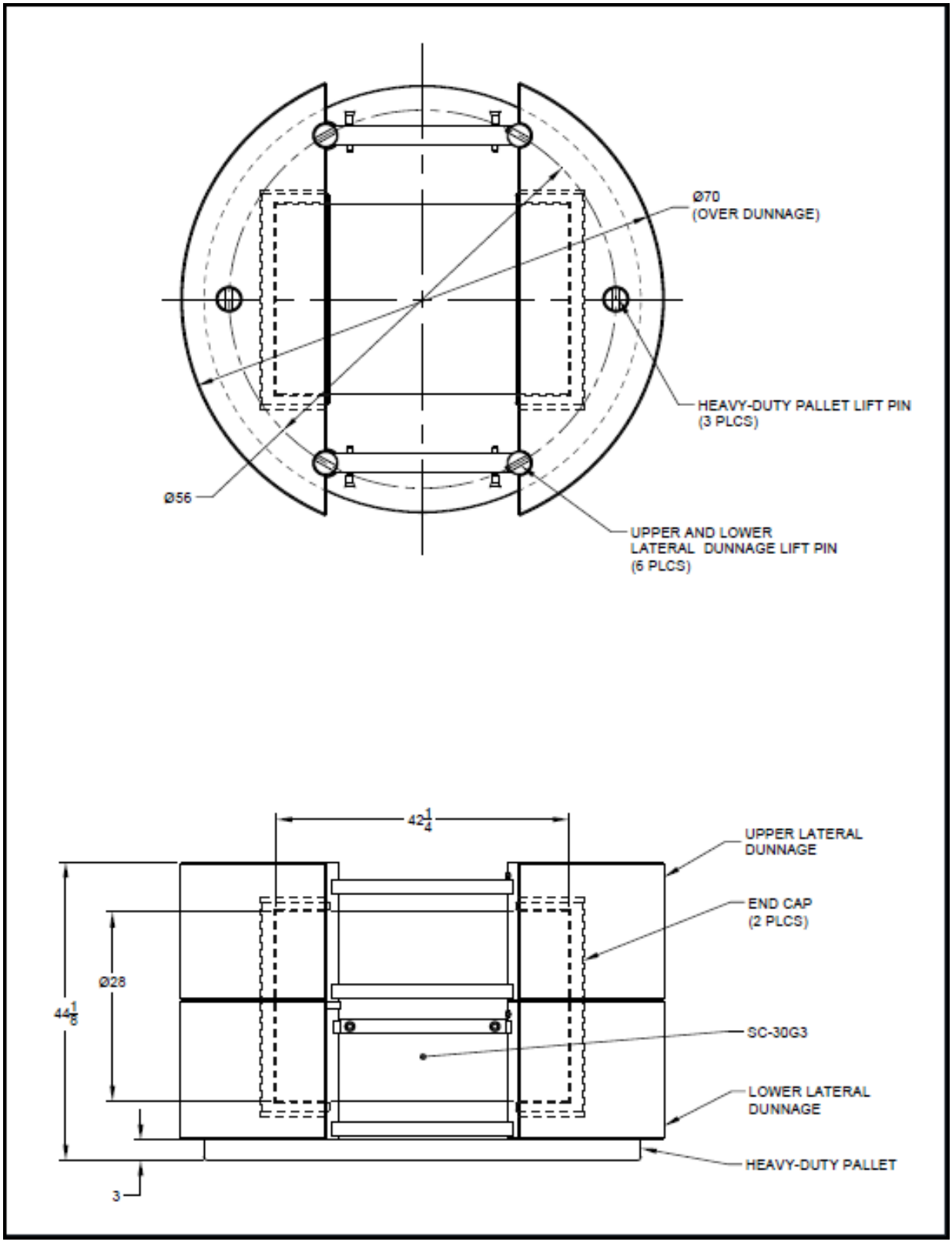

Figure 2-2. SC-30G3 Shielded Container Payload for HalfPACT (dimensions are in inches)

Table 2-2. SC-30G3 Shielded Container Weights

Component	Weight (pounds)	
	Approximate Empty	Maximum Gross
SC-30G3	5,750	6,300

Remote-handled TRU waste must be loaded into a vented 30-gallon steel drum with an inside lever lock, which is then loaded into the SC-30G3 with the aid of an optional mesh handling bag. Once loaded, the SC is shipped and managed as CH TRU waste.

Table 2-3 identifies material content forms authorized for transport within a SC-30G3. Table 2-3.

SC-30G3 Shielded Container: Material Content Forms Authorized for Transport

Form Number	Description
1	Direct load 30-gallon drum: Solids, any particle size (e.g., fine powder or inorganic particulates)
2	Direct load 30-gallon drum: Solids, large particle size (e.g., sand, concrete, or debris)
3	Direct load 30-gallon drum: Solids, large objects (e.g., metal cans containing waste)

4.0 SC-55G1 Shielded Container

The SC-55G1 shielded container is authorized for transport within the HalfPACT (Figure 3-1). The HalfPACT will accommodate two SC-55G1s (Figure 3-2). The SC- 55G1 will be configured as a 2-pack on a circular pallet surrounded by radial and axial dunnage components and will be transported as a single 2-pack configuration within the HalfPACT packaging. The approximate dimensions of the SC-55G1 are given in Table 3-1.

Table 3-1. SC-55G1 Shielded Container Dimensions

Dimension	Approximate Measurement (inches)	
	Inside Dimension	Outside Dimension
Height	35¾	40½
Diameter	25	29⅜

The SC-55G1 body side wall is constructed of 2¼-in. nominal steel. The SC-55G1 lid is constructed of 2⅜-in. nominal steel. The SC-55G1 base is constructed of 2⅜-in. nominal steel. The lid is bolted on with 12, ⅝-in. Grade 8 closure bolts. A gasket of silicone rubber is required for lid closure. The SC-55G1 and its 55-gallon steel drum contents are vented. The SC-55G1 vent port includes a lead shield plug. Table 3-2 presents the SC-55G1 materials of construction.

Table 3-2. SC-55G1 Shielded Container Materials of Construction

SC-55G1 Component	Material
Lid and body	Carbon steel
Filter shield plug	Lead
Gasket	Silicone rubber

Table 3-3 specifies the weights associated with the SC-55G1 that are applicable to shipment within the HalfPACT.

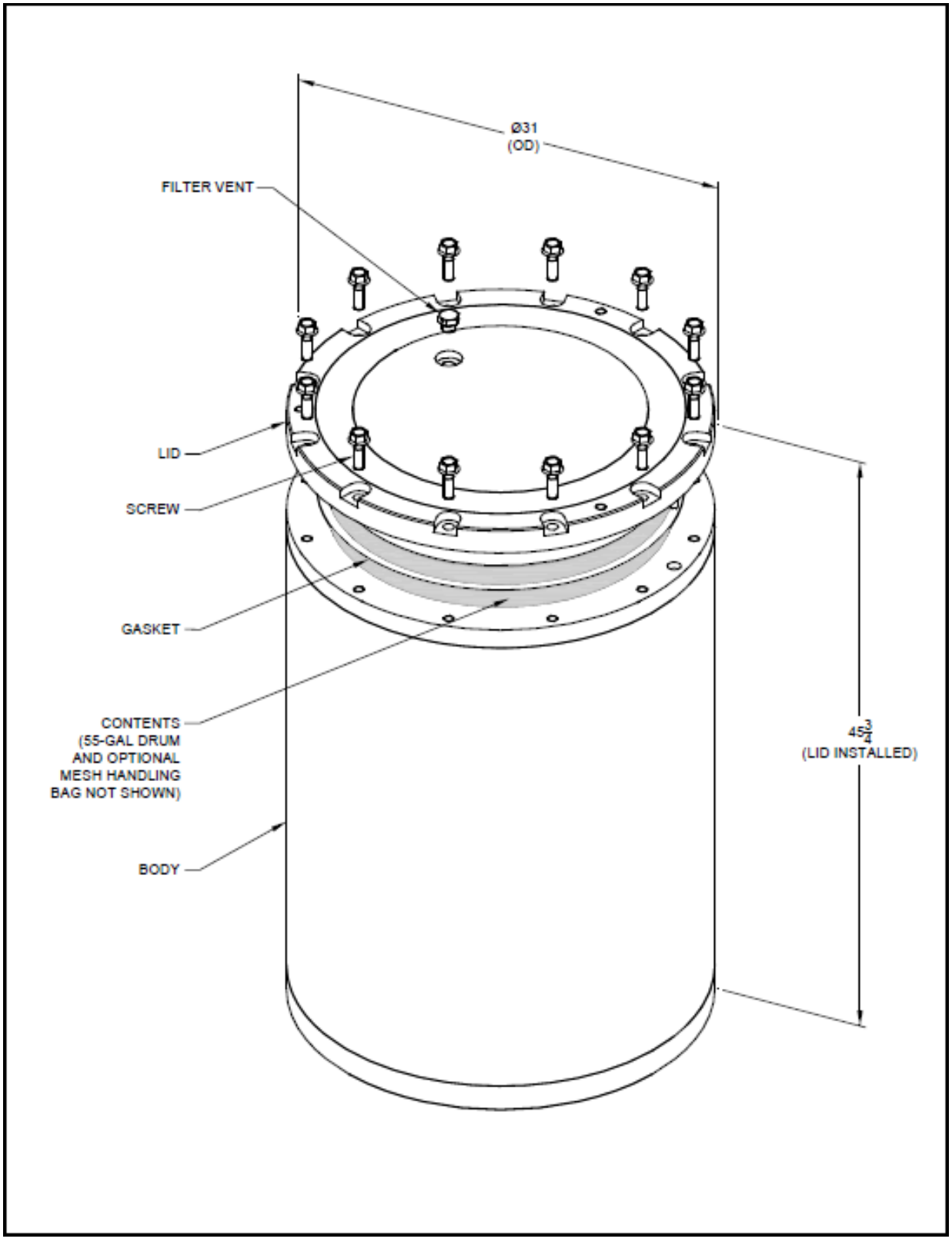

Figure 3-1. SC-55G1 Shielded Container (dimensions are in inches)

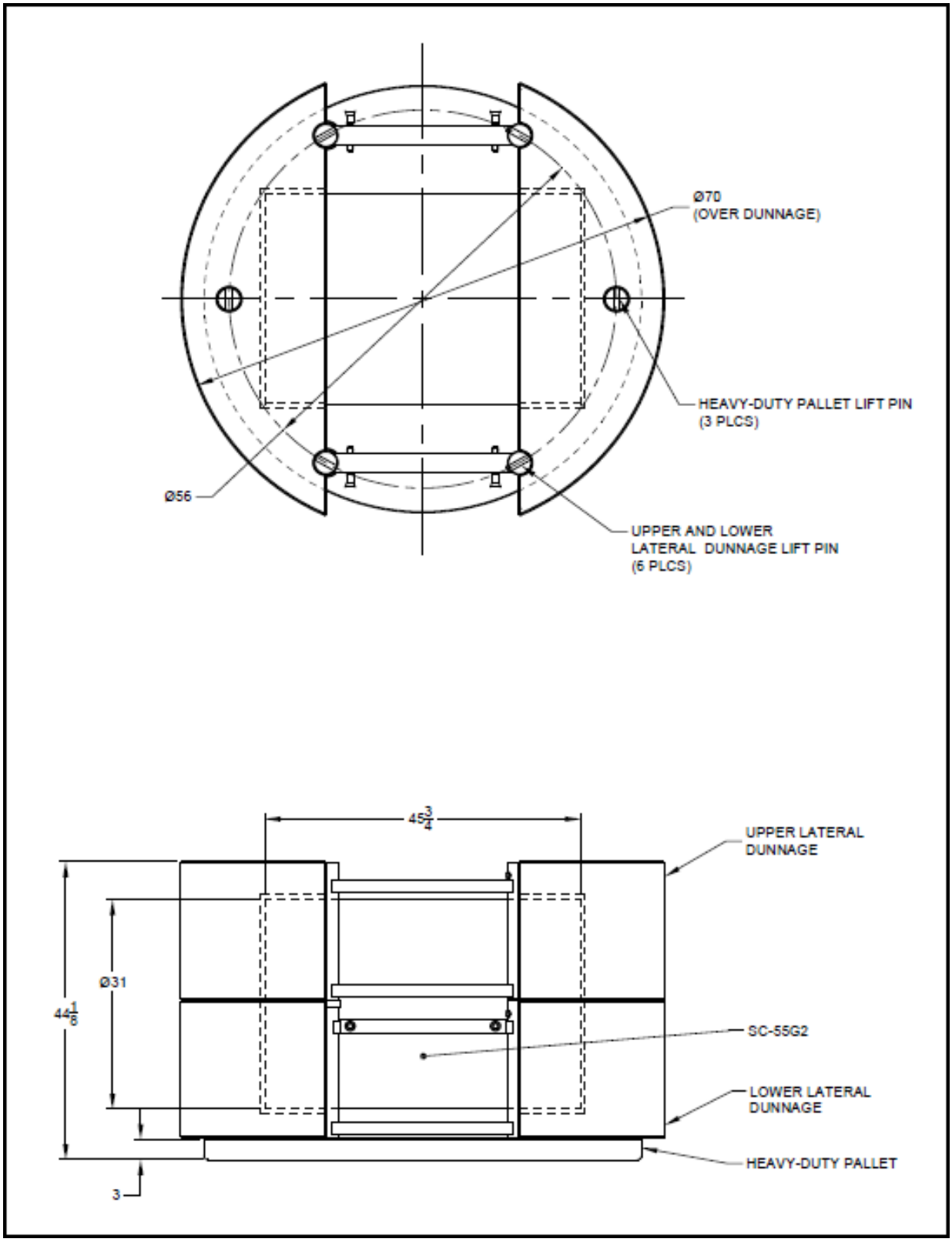

Figure 3-2. SC-55G1 Shielded Container Payload for HalfPACT (dimensions are in inches)

Table 3-3. SC-55G1 Shielded Container Weights

Component	Weight (pounds)	
	Approximate Empty	Maximum Gross
SC-55G1	2,810	3,410

Remote-handled TRU waste must be loaded into a vented 55-gallon steel drum with an inside lever lock, which is then loaded into the SC-55G1 with the aid of an optional mesh handling bag. Once loaded, the SC is shipped and managed as CH TRU waste. Empty SC-55G1s used as dunnage to complete a payload must also meet the specifications presented in this section with the exception that dunnage containers shall not include a 55-gallon drum and shall have an open vent port (i.e., not filtered or plugged).

Table 3-4 identifies material content forms authorized for transport within a SC-55G1. Table 3-4.

SC-55G1 Shielded Container: Material Content Forms Authorized for Transport

Form Number	Description
1	Direct load 55-gallon drum: Solids, any particle size (e.g., fine powder or inorganic particulates)
2	Direct load 55-gallon drum: Solids, large particle size (e.g., sand, concrete, or debris)
3	Direct load 55-gallon drum: Solids, large objects (e.g., metal cans containing waste)

5.0 SC-55G2 Shielded Container

The SC-55G2 shielded container is authorized for transport within the HalfPACT (Figure 4-1). The HalfPACT will accommodate one SC-55G2 (Figure 4-2). The SC-55G2 will be configured as a lateral single-pack on a circular pallet surrounded and supported by radial and axial dunnage components and will be transported as one single-pack configuration within the HalfPACT packaging. The approximate dimensions of the SC-55G2 are given in Table 4-1.

Table 4-1. SC-55G2 Shielded Container Dimensions

Dimension	Approximate Measurement (inches)	
	Inside Dimension	Outside Dimension
Height	35¾	45¾
Diameter	25	31

The SC-55G2 body side wall is constructed of 2-in. nominal lead and 1-in. nominal steel. The SC-55G2 lid is constructed of 1½-in. nominal lead and 4¼-in. nominal steel. The SC-55G2 base is constructed of 1¾-in. nominal lead and 2½-in. nominal steel. The lid is bolted on with 12, ¾-in. Grade 8 closure bolts. A gasket of silicone rubber is required for lid closure. The SC-55G2 and its 55-gallon steel drum contents are vented. The SC-55G2 lid also incorporates a ½-in. thick lead shield ring. Table 4-2 presents the SC-55G2 materials of construction.

Table 4-2. SC-55G2 Shielded Container Materials of Construction

SC-55G2 Component	Material
Body flange	Carbon steel
Lid, body base, and body side wall	Lead and carbon steel
Lid shield ring	Lead
Gasket	Silicone rubber

Table 4-3 specifies the weights associated with the SC-55G2 that are applicable to shipment within the HalfPACT.

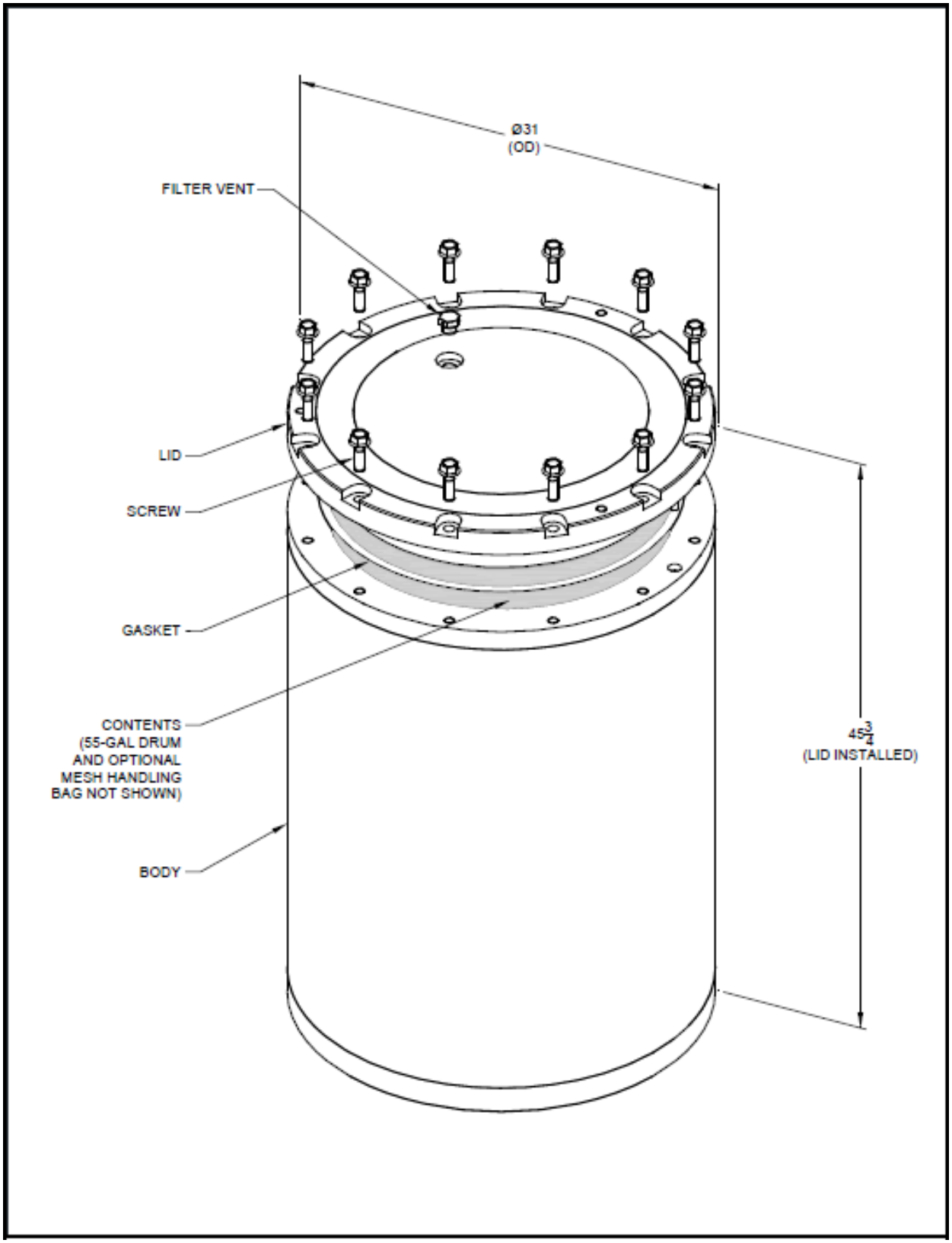

Figure 4-1. SC-55G2 Shielded Container (dimensions are in inches)

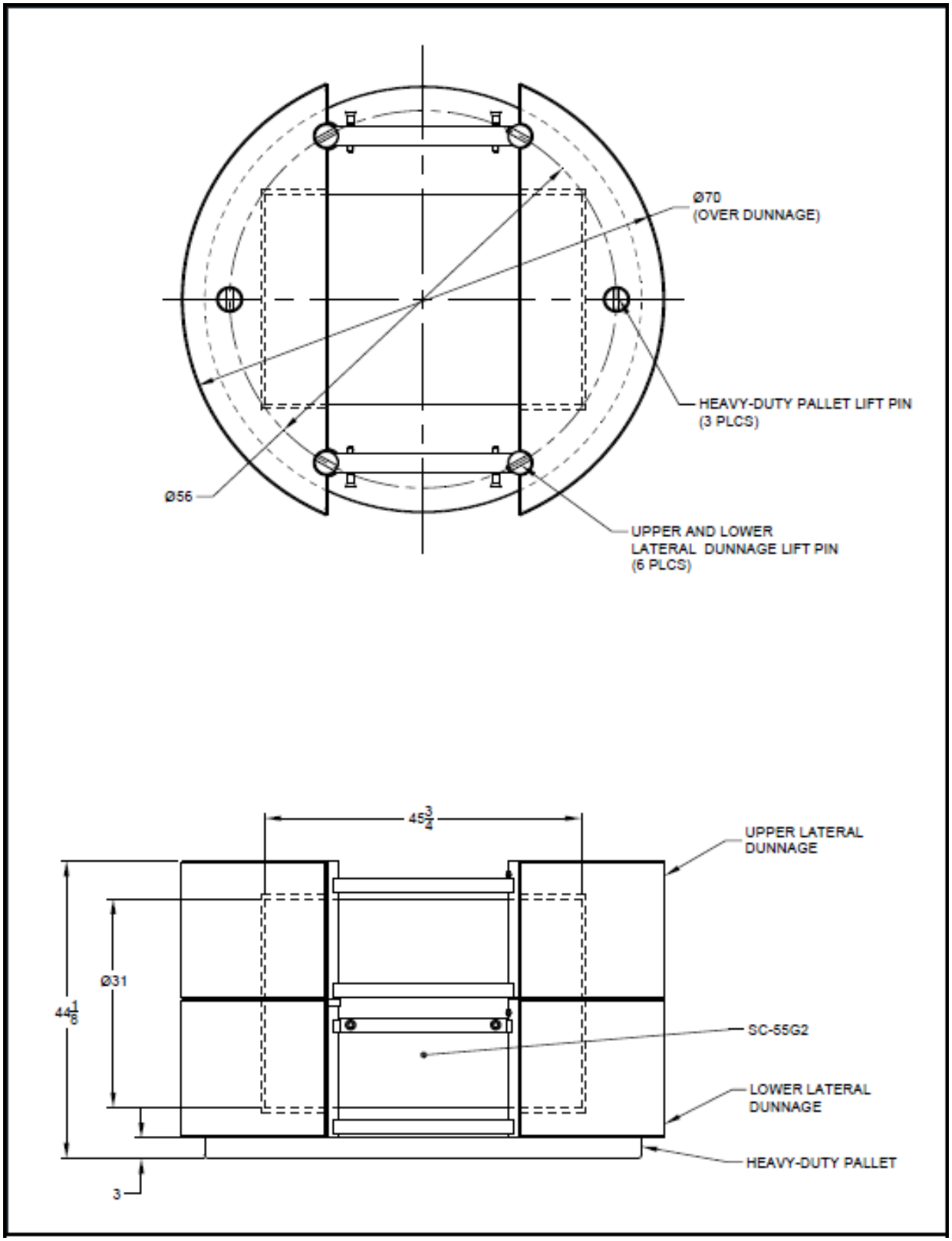

Figure 4-2. SC-55G2 Shielded Container Payload for HalfPACT (dimensions are in inches)

Table 4-3. SC-55G2 Shielded Container Weights

Component	Weight (pounds)	
	Approximate Empty	Maximum Gross
SC-55G2	5,900	6,500

Remote-handled TRU waste must be loaded into a vented 55-gallon steel drum with an inside lever lock, which is then loaded into the SC-55G2 with the aid of an optional mesh handling bag. Once loaded, the SC is shipped and managed as CH TRU waste.

Table 4-4 identifies material content forms authorized for transport within a SC-55G2. Table 4-4.

SC-55G2 Shielded Container: Material Content Forms Authorized for Transport

Form Number	Description
1	Direct load 55-gallon drum: Solids, any particle size (e.g., fine powder or inorganic particulates)
2	Direct load 55-gallon drum: Solids, large particle size (e.g., sand, concrete, or debris)
3	Direct load 55-gallon drum: Solids, large objects (e.g., metal cans containing waste)

6.0 References

1) EPA correspondence from Jonathan Edwards, Director, Radiation Protection Division, to Ed Ziemianski, Acting Manager, Carlsbad Field Office, dated August 8, 2011

2) DOE letter CBFO:AMO:RP:KJB:07-2218 UFC:5486.00 from David C. Moody, Manager, to Juan Reyes, U.S. Environmental Protection Agency, Subject: Transmittal of Planned Change Request for Shielded Containers, dated November 15, 2007

3) DOE letter CBFO:AMO:RP:KJB:08-0442 UFC:5487.00 from David Moody, Manager, to Juan Reyes, Director, Radiation Protection Division, Subject: Shielded Container Planned Change request, dated April 30, 2008

4) NRC letter to NWP: Docket Numbers 71-9218 and 71-9279 from Yoira K. Sanabria, Chief, Storage and Transportation Licensing Branch, Division of Fuel Management, Office of Nuclear Material Safety and Safeguards, to Todd E. Selmer, Manager, Packing and Information Systems, dated April 28, 2022

5) U.S. Nuclear Regulatory Commission (NRC), October 2022, Safety Analysis Report for the Model No. HalfPACT Package, Revision 9, Docket No. 71-9279